EXHIBITOR MANUAL 2026

BUILD-UP PERIOD

20th October 2026, 100 hrs. (Tuesday)
Handing over space to Bare Space Exhibitors. Temp. Electricity will be provided if applied.

20th – 21st October 2026 - 1000 hrs - 1800 hrs (Tuesday - Wednesday)
Delivery of freight to raw space stands.

21st October 2026 - 1200 hrs - 1500 hrs – (Wednesday)
Handing over space to Shell Space Exhibitors.

21st October 2026 - 1200 hrs - 1500 hrs – (Wednesday)
Delivery of freight to Shell Space stands.

21st October 2026 - 2200 hrs – (Wednesday)
Completion of all booths - Raw & Shell Scheme

21st October 2026 - 2200 hrs – (Wednesday)
All unwanted stores/refuse to be cleared. Final cleaning of halls and completion of all booths.

EXHIBITION PERIOD

22nd October 2026 1000 hrs (Thursday)
Opening Ceremony

22nd to 24th October 2026 1000 - 1800 hrs (Thursday to Saturday)
Trade & Business Visitors

24th October 1500 hrs (Saturday)
Exit Passes will be distributed.

EXHIBITOR'S BADGE DISTRIBUTION

21st October 2026 1100 hrs (Wednesday)
From the Registration Counter (Hall No. 4)

LIST OF SERVICE PROVIDERS

CARGO MOVEMENTS & CLEARANCE

R. E. ROGERS INDIA PVT. LTD.

501/502, Midas, Sahar Plaza Complex, Mathuradas Vasanji Road, Andheri (E), Mumbai- 400 059.

Tel: +91-22-30880313 Fax: +91-22-28208942

Mr. Nanhe Mishra / Mr. Dinesh Tambe / Mr. Damodar Shenoy

Mobile: +91-9819798027 / +91-9920915375 / +91-9920108787

E-mail: nanhe@rogersworldwideindia.com / dinesht@rogersworldwideindia.com / damodar@rogersworldwideindia.com

OFFICIAL STAND CONSTRUCTION AGENCY

ACCESS PROMOTIONS

118, 1st Flr, Udyog Bhavan Premises Co-Op Society, Sonawala Rd, Goregaon (E), Mumbai 400063

Mr. Kaushik Kelaskar Mobile No. - +91 99205 63051

Email: kaushik@accesspro.in

HOSTESSES SERVICE PROVIDER

PREMIER MARKETING

S 13, Zoom Plaza, 2nd Floor, Nr. Gorai Bus Depot, Borivali West, Mumbai – 400091

Ms. Renuka Uchil Mobile: + 91 9820214536

Nisha Vishwakarma Mobile: +91-9137567919

E-mail: service@premiermktg.in

OFFICIAL HOUSEKEEPING SERVICES FOR BARE SPACE

RAJPUT SERVICES PVT. LTD.

113, 1st Floor, Vakil Chamber, A-115, Street 1, Shakarpur, Vikas Marg, Delhi 110092

Mr. Roshan Singh M: +91-99536 00764

E: info.rsplgroup@gmail.com | W: www.rsplgroup.in

OFFICIAL BARE SPACE STAND CONSTRUCTION AGENCY

BM INNOVATIONS INDIA PVT LTD
Contact Person: Ms. Sakshi Yadav
Mobile: 9311180323
Email: reachus@brandmakers.in
Address: C-546, 3rd Floor, Saraswati Vihar,
Pitampura, New Delhi, Delhi 110034

CACHET EVENTS
Contact Person: Ms. Janet Fernandes
Mobile: 9136487089
Email: marketing3@cachet.net.in
Address: 105 Vijay Industrial Estate, Behind Geeta Industrial Estate,
IB Patel Road, Goregaon (E), Mumbai-400063

INPEACEMEDIA CONCEPTS PVT LTD
Contact Person: Mr. Uttam Jalandra
Mobile: 9892193923
Email: uttam@inpeacemedia.com
Address: 104, New Diamond Indl., W.E. Highway,
Goregoan (E), Mumbai-40063

MAUVE DESIGN SOLUTION
Contact Person: Mr. Virendra Bisht
Mobile: 9818856622214
Email: mauvedesigsolution@gmail.com
Address: Cloud 9, Sector-1, Vaishali,
Ghaziabad – 201010

CATALOGUE ENTRY

Each exhibitor is required to fill the appropriate form for catalogue entry. Exhibitors may also include the name of their collaborator, principal, agent, or group company in the directory, provided they operate in the same line of business.

For each additional entry, an extra charge of INR 1,500 + GST will apply.

TAXES

- The Government of India levies GST on all exhibition services, including stall rentals, electrical charges, and other fair-related services.
- The applicable GST rate for the exhibition is 18% on the total billing amount.
- S D Promo Media Pvt. Ltd. GST Number: 27AASCS8697L1Z0

VENDOR REGISTRATION & SECURITY DEPOSIT

Please note the following important guidelines for Bare Space Exhibitors at AutoTechnicia 2026:

- Exhibitors are responsible for their own stand design and construction.
- The stall design must be submitted to the Organizers by email at pallav@sdpromomedia.com for approval **by October 10, 2026**
- **Contractors responsible for stall construction must pay Rs. 2000/= as registration and a refundable security deposit of ₹25,000 per booth before taking possession of the stall.**
- The security deposit will be refunded after completion of the exhibition, subject to the booth/stall area being handed over in proper condition and compliance with the exhibition rules and guidelines.

ELECTRICITY & POWER CONNECTION AND CONSUMPTION

- Shell stands will be provided with a single-phase electricity connection for spotlights and a 5/15 Amp socket, as per the standard package.
- Bare space exhibitors must pay separately for electricity connection and consumption charges.
- Additional electricity requirements for shell stands (e.g., for running equipment, machines, or extra lighting) must be paid for by the exhibiting company. The applicable charges are detailed in the online electricity form.

OTHER SERVICES AND FACILITIES

- Additional services such as housekeeping, security, and other facilities will be available for an extra fee.
- Companies requiring these services must submit their requests in advance via email.
- If the requested service is not provided by the organizer, the amount paid will be refunded to the exhibitor.

CONSTRUCTION OF STANDS

- The interior design of each stand must comply with the architectural guidelines set by Organizer.
- Exhibitors are only permitted to construct stands as per the design approved by organizer.
- All exhibitors must submit their stand designs for approval to organizer by October 10, 2026.
- Non-compliance with the guidelines will result in: A penalty of INR 5,000
- All construction materials, waste, and empty packaging must be cleared by 8:00 PM on October 21st, 2026.
- Construction is only allowed within the designated stand area or outside the hall. Work in walkways is strictly prohibited.

STAND COMPLETION

All stands must be fully completed by 10:00 PM on October 21st, 2026.

OPERATION OF STANDS

- No stand should remain unattended at any time.
- Stands must open at least 30 minutes before the exhibition begins and remain open for at least 30 minutes after closing each day.

STORAGE OF EXHIBITS & EMPTY PACKAGING

Storage behind the exhibition stands is not permitted. All exhibits and empty packaging must be stored in designated areas.

VACATION OF SPACE

Exhibitors must vacate their stands, including shell scheme and bare space, by 12:30 AM on October 25th, 2026.

DAMAGES TO THE EXHIBITION HALL

Exhibitors are responsible for any damages caused to the hall. Any damage must be repaired or compensated by the exhibitor.

SALES OF EXHIBITS

On-site counter sales are strictly prohibited during the exhibition.

HANDLING OF EXHIBITS, CUSTOMS, AND IMPORT

Only organizer-empaneled cargo agents are permitted to handle exhibits. No other cargo agents will be allowed to operate within the exhibition premises.

SERVICE AGENCIES

Service providers for security, cleaning, catering, etc. will be limited to agencies empaneled by organizer. Other service agencies will not be permitted to enter or operate within the exhibition.

PUBLIC SAFETY & SECURITY

- Exhibitors and their representatives must be present at their stands at all times during exhibition hours to receive visitors.
- Early closure of stands before the official closing time is not permitted.

FIRE SAFETY & FLAMMABLE MATERIALS

- All disposable inflammable materials (e.g., empty boxes, wrappings) must be immediately removed from the exhibition premises.
- The use of flammable materials for stand decoration is strictly prohibited unless treated with a fire-retardant substance.
- Heating appliances are strictly prohibited inside the stands.

INSURANCE & LIABILITY FOR UNFORESEEN INCIDENTS

- Exhibitors must arrange their own insurance to cover risks from transportation, display, and removal of exhibits. S D Promo Media assumes no liability for any claims.
- Exhibitors are solely responsible for any damage or loss to exhibits, equipment, decorations, stock, or stands due to fire, theft, water damage, or natural calamities.
- Exhibitors are responsible for accidents involving: Their staff, Organizer's personnel, technicians, or employees within their stand or neighbouring stands.
- Equipment, machines, or electrical appliances that may cause fire or injury.
- Exhibitors must obtain third-party liability insurance, covering: Accidents involving third parties within the exhibitor's stand. Any liability for accidents linked to AUTOTECHNICIA 2026.
- Exhibitors should also insure their exhibits against all possible risks permitted under insurance regulations.
- Each exhibitor is responsible for obtaining insurance coverage for expenses incurred due to the abandonment or postponement of the exhibition for any unavoidable reason. The insurance policies mentioned above have to include the insurer's renunciation of any legal action/penalty arising in the event of damage or accidents against the Executives, Representatives, Directors and Employees of the following organizations:
    - Organizers: S D Promo Media Pvt Ltd, Noida
    - Bombay Exhibition Centre, Mumbai
    - Municipality or Local Administration of Mumbai
    - Architects and Contractors employed by the Organizers
    - Overseas Associates & Supporting organizations

EXHIBITOR LIABILITY PERIOD

The exhibitor's liability period begins from the moment the exhibitor, their employees, agents, or contractors enter the exhibition site and continues until all exhibits and property are removed from the premises.

INSURANCE, INDEMNIFICATION & ORGANIZER'S LIABILITY

- Exhibitors must insure, indemnify, and hold the Organizers harmless against all costs, claims, demands, and expenses arising from any loss or injury to any person, including: Delegates, visitors, and the general public. Organizers' staff, agents, and contractors.
- Such loss or injury may result from any act or default of the exhibitor, their employees, agents, contractors, or invitees.
- If deemed necessary, the Organizers may request proof of adequate insurance coverage from the exhibitor.
- The Organizers will not be held responsible for: Delays or restrictions affecting stand construction, erection, completion, alteration, or dismantling. Failure of services or amenities provided by the Organizers. Cancellation, partial closure, or modifications to the Exhibition due to circumstances beyond their control.

EXHIBITOR BADGES FOR ENTRY & EXIT

- Entry to the exhibition will be allowed only with exhibitor passes issued by Organizer.
- Each exhibitor will receive three (3) passes per 9 Sqm of space.
- Entry of vehicles into NSE Complex will not be permitted during exhibition hours or during other restricted time slots.
- Exit passes are mandatory for any exhibits or materials being taken out of the exhibition premises.

VIOLATION OF RULES

If an exhibitor violates any exhibition rules, S D Promo Media Pvt Ltd reserves the right to close their stall without any compensation or refund.

A SHELL STAND OF 9 SQM WILL INCLUDE:

Side Partition (1/2/3 Sides)	Fascia Name	Spot Lights (3 Nos)
Floor Carpet (Inside Booth)	Electric Socket (5/15 Amp) (1 No.)	Chairs (3 Nos)
Information Counter (1 No.)	Glass Round Table (1 No.)	Dust Bin (1 No.)

LAYOUT OF SHELL SCHEME BOOTH (STANDARD 9SQM)

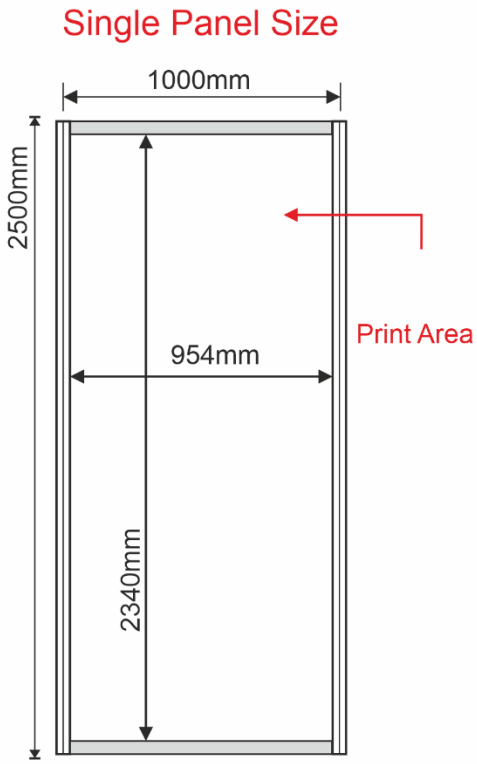

BASIC FURNITURE AS PER BOOTH SIZE

Booth Size	Information Counter	Visitor Chairs	Spot Light	Electric Socket	Dust Bin
9 SQM	1	2	3	1	1
12 SQM	1	2	4	1	1
15 SQM	1	2	5	1	1
18 SQM	2	4	6	2	2
21 SQM	2	4	7	2	2
24 SQM	2	4	8	2	2
27 SQM	3	6	9	3	3
30 SQM	3	6	10	3	3
33 SQM	3	6	11	3	3
36 SQM	4	8	12	4	4

RULES FOR SHELL SCHEME STANDS

MINIMUM SPACE REQUIREMENT

The minimum space for a shell scheme stand is 9 sq. meters.

PANEL MODIFICATIONS

Painting or wallpapering of panels is not permitted. Exhibitors who wish to modify the panels must seek approval from the Official Stand Fitting Contractor and pay for the modifications

FIXING RESTRICTIONS

No additional fittings, displays, nails, screws, or drilling are allowed on the booth structure. Any damage caused will result in penalties charged by the Official Stand Fitting Contractor.

FLAMMABLE MATERIALS & HEATING APPLIANCES

The use of flammable materials for decoration is prohibited unless treated with a fire-retardant substance. - The use of heating appliances is strictly prohibited.

STRUCTURAL MODIFICATIONS

- No suspensions from the hall ceiling, walls, columns, floors, or any building structure are allowed.
- Exhibitors must only utilize the inner stall area allocated to them for display purposes.

HEIGHT RESTRICTIONS

- The maximum height for all fittings/exhibits is 2.5 m.
- Rear and side walls should be 2.5 m high.
- Structures or exhibits between 2.5 m and 4 m in height must: - Be approved by the Organizers.
- Maintain a minimum distance of 1 m from the rear, sides, and front of the stand.

NON-UTILIZED ITEMS

Exhibitors will not receive financial credit for any shell scheme stand items that they choose not to use.

ADDITIONAL ITEMS & FURNITURE

- Exhibitors must coordinate directly with the Official Stand Fitting Contractor for any additional furniture or fittings at an extra cost.

- Any disputes regarding additional items must be resolved directly between the exhibitor and the contractor.

- Exhibitors are liable for damages to any additional items they acquire.

ELECTRICITY SUPPLY

Each 9 sq. meter shell scheme stall will be provided with a 0.5 KW power supply, including lighting load, free of charge.

ADDITIONAL FURNITURE AND ELECTRICAL ITEMS

The price list for additional furniture and electrical fittings is available in the Additional Furniture List.

AUTO TECHNICIA

22-23-24 OCTOBER 2026

BOMBAY EXHIBITION CENTRE (BEC)

MUMBAI - INDIA

ADDITIONAL FURNITURE CATALOGUE

AP-01
Revolving Chair
INR 1500/=

AP-02
Visitor Chair
INR 800/=

AP-03
White Leather Chair
INR 1200/=

AP-04
Black Leather Chair
INR 1000/=

AP-05
White Bar Stool
INR 1500/=

AP-06
Black Bar Stool
INR 1500/=

AP-07
Single Seat Sofa
INR 2500/=

AP-08
Double Seat Sofa
INR 4500/=

AP-09
Triple Seat Sofa
INR 7000/=

AP-10
Coffee Table
INR 1200/=

D-750 x H-750mm

AP-11
Glass Round Table
INR 1500/=

D-600 x H-1100 mm

AP-12
Round Cocktail Table
INR 1500/=

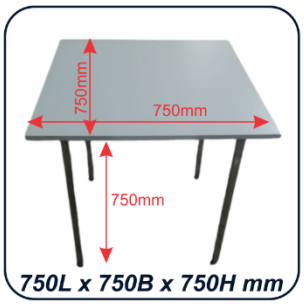

750L x 750B x 750H mm

AP-13
Square Table
INR 1200/=

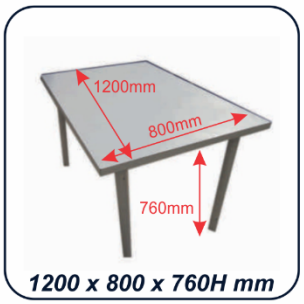

1200 x 800 x 760H mm

AP-14
Meeting Table
INR 3500/=

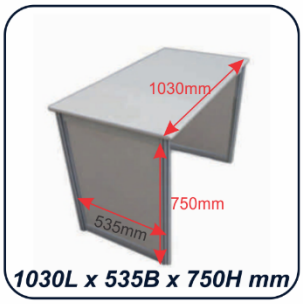

1030L x 535B x 750H mm

AP-15
Information Counter
INR 1200/=

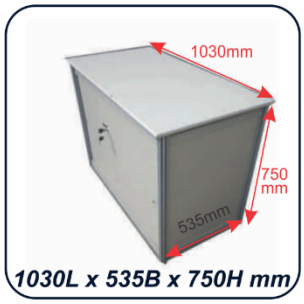

1030L x 535B x 750H mm

AP-16
Lockable Counter
INR 2000/=

Email the form to info@sdpromomedia.com

ADDITIONAL FURNITURE CATALOGUE

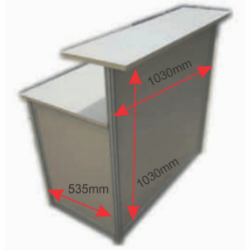

1030L x 535B x 1030H mm

AP-17
2 Tier Counter
INR 4000/=

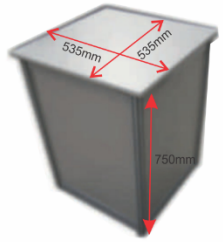

535L x 535B x 750H mm

AP-18
Podium
INR 1200/=

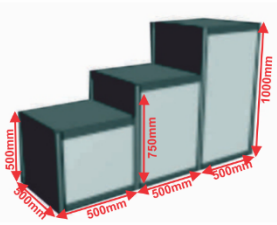

AP-19
Step Podium
INR 4000/=

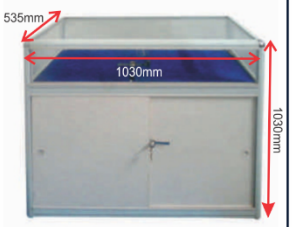

1030L x 535B x 1030H mm

AP-20
Small Showcase
INR 3500/=

535L x 535B x 2000H mm

AP-21
Slim Showcase
INR 5000/=

1030L x 535B x 2000H mm

AP-22
Tall Showcase
INR 6500/=

1000L x 300B mm

AP-23
Shelving Wood
INR 700/=

1000L x 300B mm

AP-24
Shelving Glass
INR 750/=

AP-25
Lockable Door
INR 4500/=

AP-26
Brochure Stand
INR 1500/=

1000L x 2500H mm

AP-27
Independent Panel
INR 1000/=

AP-28
Garment Stand
INR 3500/=

AP-29
LED Flood Light (70w)
INR 3000/=

AP-30
Spot Light
INR 750/=

AP-31
Power Socket
INR 750/=

AP-32
Power Strip
INR 1000/=

Email the form to info@sdpromomedia.com

ADDITIONAL FURNITURE CATALOGUE

AP-33
Pedestal Fan
INR 2000/=

AP-34
Chain Barricading
INR 1500/=

AP-35
Dustbin
INR 150/=

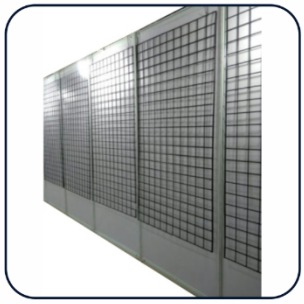

AP-36
Hanging Mesh 6'x3'
INR 3000/=

AP-37
LED TV 32"
INR 6000/=

AP-38
LED TV 42"
INR 8000/=

AP-39
LED TV 50"
INR 10000/=

AP-40
LED TV 55"
INR 12000/=

NOTE: ALL ADDITIONAL FURNITURES BILLING & ORDERS TO BE EXECUTIVED BY OUR OFFICIAL CONTRACTOR: -

ACCESS PROMOTIONS

118, 1st Flr, Udyog Bhavan
Premises Co-Op Society, Sonawala Rd,
Goregaon (E), Mumbai 400063

Mr. Kaushik Kelaskar
Mobile No. - +91 99205 63051
Email: kaushik@accesspro.in

GUIDELINES FOR CONSTRUCTION AND SETTING UP STANDS

PROCEDURE FOR TAKING POSSESSION OF STANDS

- Possession of shell scheme stands, and bare space areas will only be granted after full payment of all dues.
- The designated representative collecting the stand must have an authorization letter from the exhibitor company, printed on company letterhead.

Sample Authorization Letter:

"We hereby authorize Mr. ..... (Name of Personnel), Designation---------- to take possession of our stall number --------- in hall number----------. The above-mentioned person will be responsible for the stand and the exhibits on display on behalf of our company."

The authorization letter must be submitted to the Organizers' site office at Bombay Exhibition Centre, Mumbai.

VENDOR REGISTRATION & SECURITY DEPOSIT

Please note the following important guidelines for Bare Space Exhibitors at AutoTechnicia 2026:

- Exhibitors are responsible for their own stand design and construction.
- The stall design must be submitted to the Organizers by email at pallav@sdpromomedia.com for approval **by October 10, 2026**
- **Contractors responsible for stall construction must pay Rs. 2000/= as registration and a refundable security deposit of ₹25,000 per booth before taking possession of the stall.**
- The security deposit will be refunded after completion of the exhibition, subject to the booth/stall area being handed over in proper condition and compliance with the exhibition rules and guidelines.

TIME SCHEDULE FOR TAKING POSSESSION OF STANDS

- Bare Space: October 20th, 2026, from 10:00 AM onwards.
- Shell Scheme: October 21st, 2026, from 11:00 AM onwards.
- Stall construction and decoration must be completed by 10:00 PM on October 21st, 2026.

CONSTRUCTION OF STANDS

Unauthorized contractors will not be allowed entry into the exhibition halls.

SPECIFIC ARCHITECTURAL CONTROL AND GUIDELINES

The minimum passage width must be:

- 3 meters for main walkways (or as marked on the layout plan).
- 2 meters for passages inside stands.

Open-sided stands (one, two, three, or island stands) must leave their open sides clear of obstructions. However, low partitions up to 1.2 meters or glass partitions in the upper section are allowed.

SIZE OF STALL MAXIMUM HEIGHT OF FEATURES

Up to 40 Sqm	3.0 meters
Up to 40 Sqm to 100 Sqm	3.5 meters
Over & Above 100 Sqm	4.0 meters

- Any additional height requests must be approved by organizer.
- Construction in front of emergency exits, service doors, electrical panels, switch rooms, or other facilities is strictly prohibited.
- Any unauthorized construction in restricted areas will be removed at the exhibitor's expense, and a penalty may be imposed.
- No fixtures, supports, or attachments can be made to the ceilings, walls, columns, or floors of the venue

SPECIAL REQUIREMENTS

- Stands requiring water, drainage, compressed air, or special power connections should preferably be located at the periphery of the hall.
- Any late requests for special utilities may not be fulfilled if they obstruct public movement or due to technical constraints.

SUBMISSION OF STAND DESIGN

Exhibitors with 40 sqm or more must submit two copies of their stand design by Oct 10th, 2026.

• PLANS MUST INCLUDE:

o Floor layout o Elevations o Logo placement o Electrical points o Wall/panel heights

o Meeting rooms and exhibit placement

• APPROVAL PROCESS:

o Submitted plans will be scrutinized within 7 days by organizer.

o Any late submissions will incur a penalty of ₹10,000.

o No deviations from the approved plan will be allowed.

STAND CONSTRUCTION AND DISPLAY GUIDELINES

- Exhibitors must strictly adhere to approved designs.
- During setup, organizer will inspect displays and enforce necessary modifications at the exhibitor's expense.

BARE SPACE EXHIBITORS MUST ENSURE:

- No damage/nailing/digging on the floor.
- Any violations will be subject to penalties.

PROHIBITED ACTIVITIES NOT ALLOWED:

- Electrical flashes, flashguns, or similar devices.
- Cloth banners, velvet banners, or velvet covers on panels/tables.
- Stage shows or presentations without written approval.
- Painting, wallpapering, drilling, or nailing of panels (damage will incur a ₹1,500 per panel charge).
- Hanging items from the hall ceiling.
- Storage behind display walls.
- Digging, grouting, or cutting the floor.

STRUCTURAL GUIDELINES

- All fittings must be contained within the stand area and must not exceed 2.5 meters in height.
- No freestanding equipment may exceed 2.5 meters.
- Exhibitors with multiple open sides must ensure an open and transparent display.
- Large stands (above 100 sq. meters) may use projections up to 4 meters, subject to ceiling height restrictions and organizer approval.

FIRE & ELECTRICAL SAFETY GUIDELINES

- Fire exits, electrical boxes, and service rooms must always remain accessible.
- Electrical wiring and installations must:
  o Be carried out by licensed electrical contractors.
  o Have proper insulation and overload protection.
  o Avoid running under carpets unless protected by wooden ramps.
  o Follow Indian Electricity Rules (1956, amended).
- Motors above 5 HP must have power factor improvement capacitors.
- Each stand must have an adequate-rated switch, fuse unit, MCB, or cut-out to enable safe power isolation.

PENALTIES AND COMPLIANCE

- Failure to follow approved designs will result in a ₹30,000 penalty per violation.
- **Violating guidelines may result in:**
  o Stand closure
  o Additional fines
  o Removal of unauthorized construction at the exhibitor's cost
- **No refunds or compensation will be provided for violations:**

STALL FABRICATOR REGISTRATION & SECURITY FORM

IMPORTANT NOTICE FOR FABRICATORS & EXHIBITORS:
All official stall fabricators undertaking bare space construction for **AutoTechnicia 2026** must submit this completed form along with two separate payments prior to taking possession of the stall:

1. **Registration Charge: ₹2,000 per stall** *(Non-Refundable)*
2. **Security Deposit (DD): ₹25,000 per stall** *(Refundable Demand Draft)*

Payment Details:

- **DD / Payment Payable To: S.D. PROMO MEDIA PVT. LTD.**
- **Payable At: Noida**

Note: Failure to comply with event guidelines (including stall height, approved designs, electrical loads, masking, or timely handover) will result in forfeiture of the security DD.

1. **Stall & Exhibitor Information**

Exhibiting Company Name: _____
_____**Stall No.**_____

2. **Fabricator Details**

Fabricator Company Name _____
Fabricator GST No. _____
Contact Person Name _____
Mobile No. _____

3. **Fee & Security Deposit Payment Details: -**
   A) Non-Refundable Registration Fee (Rs.2,000 +GST Per Stall)

- **Payment Mode (Cash/UPI/NEFT):** _____
- **Transaction Ref / Rec. No:** _____
- **Date:** ____ / ____ / _____

B. Security Demand Draft (₹25,000 per stall)

- **DD Number:** _____
- **DD Amount (₹): ₹25,000**
- **Issuing Bank & Branch:** _____
- **DD Date:** ____ / ____ / _____

4. Declaration & Acknowledgement

I / We hereby confirm that the information provided above is accurate and that the Registration Fee and Security DD have been submitted to the Hall Manager / Authorized Representative of **AutoTechnicia 2026** as per the event regulations.

- **Authorized Name:** _____
- **Designation:** _____
- **Company (Exhibitor / Fabricator):** _____
- **Signature & Stamp:** _____ **Date:** ____ / ____ / _____

CARGO MOVEMENT & CLEARANCE

Movement of Exhibition Goods - Key Guidelines for Exhibitors

1. **CONNECTION TO INDIA**
   • Mumbai Port is a major entry point for international shipping and air travel. Major airlines and shipping lines connect to Mumbai, facilitating transportation for exhibitors from abroad.

2. **MATERIAL HANDLING AT THE EXHIBITION SITE**
   • Handling Restrictions: Only official agencies are permitted to handle materials on-site to ensure security, safety, and avoid damage to the venue.
   • Prohibited Equipment: Forklifts, cars, or handling equipment (like trolleys or lift jacks) can enter the exhibition halls.
   • Official Agencies: Exhibitors must engage with official clearing, forwarding, and on-site handling agents for assistance with unloading and handling materials. These agencies will have equipment like forklifts, cranes, and skilled labour.
   • Rates & Tariffs: The rates for handling services will be set by the official agents. Exhibitors should contact them in advance to determine the cost based on the scale and type of their requirements.
   • Shipping Instructions: Exhibitors, especially overseas participants, should consult with the official freight forwarders for detailed shipping instructions and deadlines to ensure smooth transition of goods.
   • Damage Responsibility: Exhibitors are responsible for ensuring their exhibits against damage during transit or handling, as the organizers will not be liable for any damages.

3. **CUSTOMS CLEARANCE FOR TEMPORARY IMPORTS**
   • Temporary Duty-Free Import: Exhibitors can import exhibits duty-free if they clear the goods under ATA Carnet, Bank Guarantee, or Embassy Bond, following Customs Notification No. 3/89. Exhibits must be re-exported within six months or as specified by Customs.
   • Customs Formalities: Exhibitors should work with official Customs Freight Agents (CFAs) to stay informed about rules and procedures regarding customs clearance.

4. **SALES OF EXHIBITS**

   • Prohibited Sales During the Event: Selling of products during the exhibition is not allowed.

   • Sales by Overseas Exhibitors: Overseas exhibitors who have imported their goods through ATA Carnet, Bank Guarantee, or Embassy Bond can sell their exhibits, but only after completing customs sale formalities and paying applicable customs duties and taxes within the prescribed period.

ELECTRICAL SERVICES

Electrical Supplies & Installations Guidelines for Exhibitors

1. ELECTRICAL POWER SUPPLY DETAILS

Voltage Available:

Single / 3-Phase: 230/400 volts (with a 10% fluctuation)

Frequency: 50 cps (with a 3% variation)

Responsibility of SDPM Personnel:

SDPM personnel will regulate and control the power supply to the exhibition hall and individual stalls.

Power Distribution:

- Each stall will receive power at one or more main points, depending on the load requirements
- Exhibitors are required to use Distribution Boards to feed power to machines.

Electrical Wiring:

- Exhibitors must handle the wiring from the main power points to their machines at their own cost.
- Authorized Electrical Contractors must carry out electrical work, and they must be licensed for electrical installations.
- Safety: Exhibitors should exercise the highest level of safety in wiring and installation.

Regulation on Power Connection:

- Power connections for exhibits should align with the details provided in the online electricity requisition.
- Exhibitors must not exceed the allotted load or connect power to machines not mentioned in the application. - Switching and Wiring:
- Each exhibit should have independent switches. Alternate connections or throw-over switches are prohibited.
- In case of multiple main supply points, load distribution must be managed in consultation with the Fair Electrical Department.

Equipment Protection:

Exhibitors are advised to install stabilizers or UPS systems for sensitive machines. Steel plates should be placed under machines sensitive to the floor.

FIRE SAFETY & SERCURITY REGULATIONS

FIRE SAFETY

Firefighting equipment will be provided at various vantage points in the exhibition halls. Exhibitors are, however, advised to take due precautions and provide necessary equipment in their own stalls. Exhibitors should also install Guards or Protectors on Machine/Exhibits during the demonstrations to avoid injury to visitors.

Exhibitors and the staff employed by them within the Exhibition stand are directly responsible for ensuring fire safety measures, including tackling of minor fire incidents. Their responsibilities will include: -

1. Study the general layout of Exhibition Halls and get acquainted with the location of exit doors, exit routes, emergency routes and emergency exits.
2. Not to use any inflammable material for decorating the standard shell stands, offices, restaurants, chalets etc. unless they are treated with fire retarding substances. Not to display/exhibit explosive, chemical, inflammable, dangerous, harmful or noxious substances unless approved by the Organizers.
3. Not to use any heating appliances to cook food in the Exhibition stands.
4. Ensure heating appliances used in business chalets are mounted on fireproof stands. Use of LPG is not permitted.
5. Keep away all inflammable/combustible waste such as empty boxes, containers, wrapping etc. away from the Exhibition premises and deposit the same in areas designated by the Organizers. Empty Boxes, Containers, Wrappings etc. if not removed, the Organizers will remove the same at the exhibitor's cost.
6. No storage of any kind is allowed behind booths or near electrical services.
7. All empty cartons and crates must be labelled and removed for storage
8. Helium balloons are not allowed inside the halls.
9. Ensure that electric wiring of equipment on display, decoration and those used for heating appliances are of adequate capacity, quality and are as per approved specifications. Cable joints, if any, be kept to the bare minimum and properly sealed to prevent sparking/overheating.
10. Drawing more power than has been demanded should be avoided as this may lead to tripping of main circuit breakers and recovery of penal charges/levies from the defaulting exhibitors
11. Alteration/interference with main circuit breaker and wirings/electrical fittings is prohibited. The Official Stand Fitting Contractor's electricians should be contacted for any additional connections. In case of any fault in the electrical installation, call for help from complaint cell of the Organizers / Service Booth of the Official Stand Fitting Contractor.
12. Observe and impose all fire precautions at all times, especially during fabrication/ installation of the stalls/chalets. Avoid throwing lighted cigarette butts and matchsticks etc. in Exhibition stands/chalets/offices
13. Smoking in the Exhibition halls and all public places during the Exhibition period is prohibited. These will be treated as "No Smoking" areas and will be so marked. Separate "Smoking Zone" may be used for this purpose
14. Tackle any minor fire incident in the stand, offices and restaurants by using the fire extinguisher installed.

15. Know the exit routes to be followed in an emergency and the location of nearest emergency exit for escape in case of major fire incidents.
16. Do not block the exit, exit route, emergency exit and passages.
17. Instruct your employees / temporary staff not to leave the stands unattended whilst work is in progress or before officially appointed time of closing.

In case of a fire incident, take following action:

1. In case of fire not coming under control by portable extinguisher, raise fire alarm by shouting "Fire, Fire" to summon assistance. Rush to Fire Watch Personnel Stationed in Exhibition halls.
2. In case of major fire incident, direct and guide the visitors and the occupants of Exhibition halls/restaurants through routes to the exit as well as emergency exits for their quick dispersal.
3. In case of major fire incident, direct and guide the visitors and the occupants of Exhibition halls/restaurants through routes to the exit as well as emergency exits for their quick dispersal.
4. Provide access and co-operation with the Organizers' fire safety supervisory staff and Fire Watch Personnel for inspection. Render all help possible to fight fire and salvage the equipment/materials.
5. Ensure quick dispersal of equipment/cars parked in the area in the event of fire incident in static display/car park areas.

SECURITY REGULATIONS

1. Badges must be worn at all times by the exhibitors managing the stall and their temporary staff to gain entry to the exhibition halls.
2. Badges can be obtained at the time of taking possession of stalls from the organizers' office at site.
3. During show days, exhibitors are allowed to enter half an hour prior to the opening of the show each day and will be allowed to remain half an hour after the close of the show
4. Particular care should be taken of items which are small & portable.
5. Hand carried items or any equipment going out of the exhibition hall will require an exit pass.

While the Organizers will maintain general security surveillance throughout the exhibition period, security of individual stalls in the responsibility of the exhibitors. Stalls are not to be left unattended during the show period, particularly before the show starts and after the show closes on the final day.